JOYCE STAINLESS STEEL JACKS

2 Ton Reverse Base

RSWJ 62 / DRSWJ 62
RSWJ 122 / DRSWJ 122
RSWJ 242 / DRSWJ 242

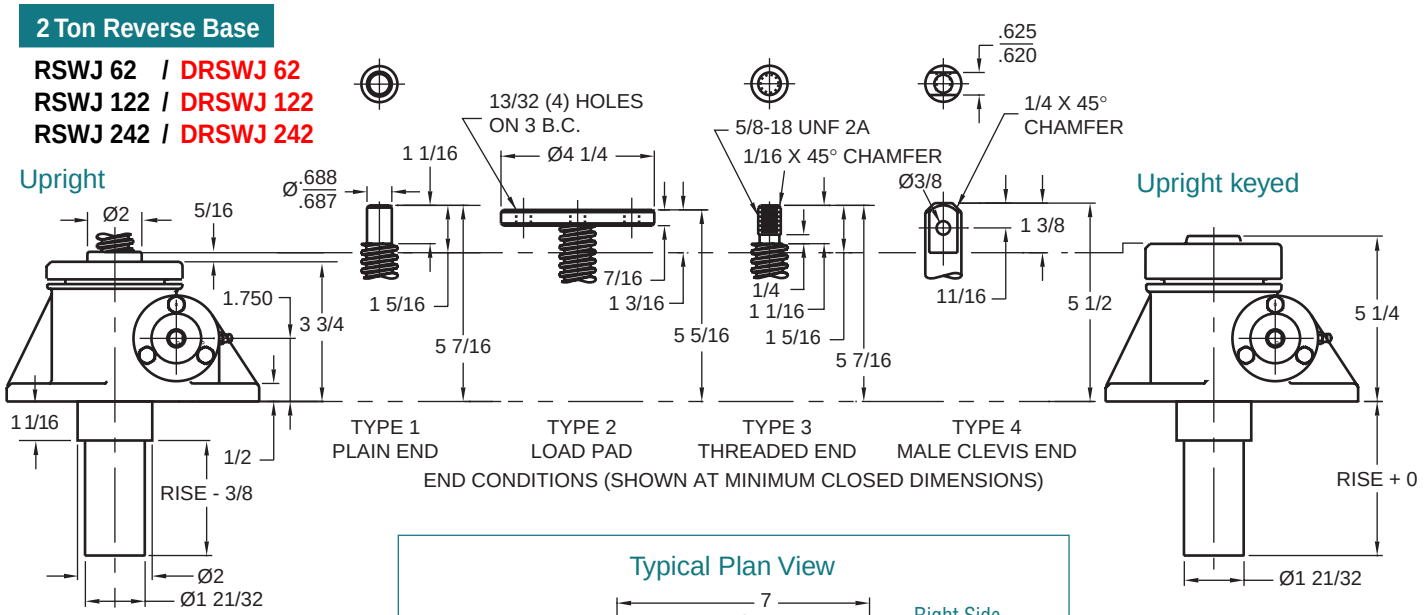

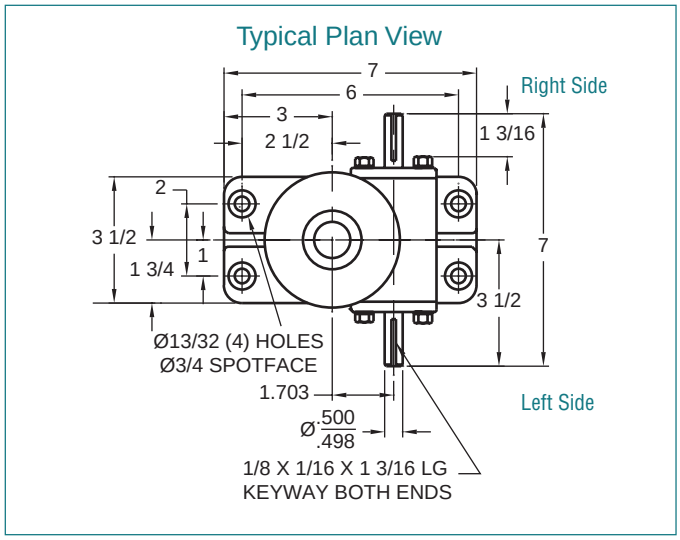

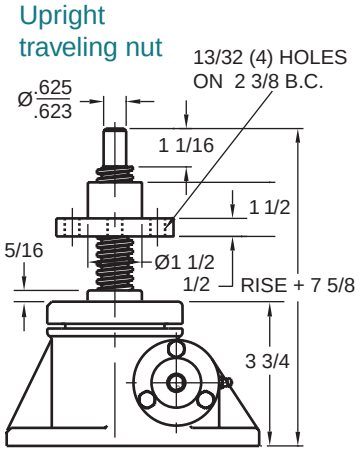

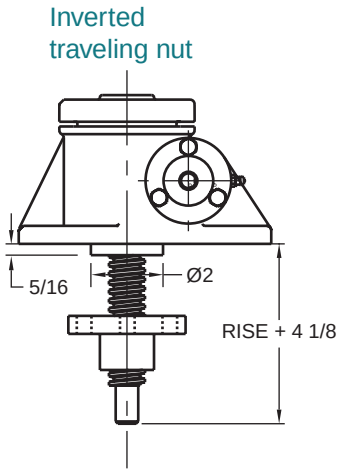

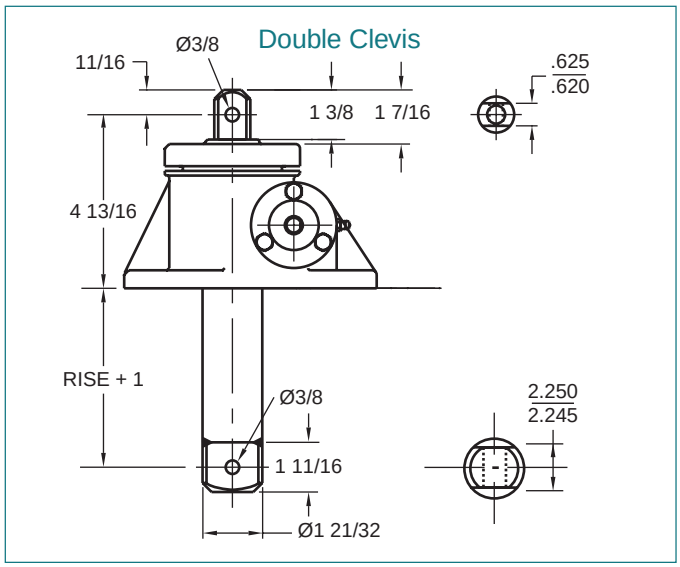

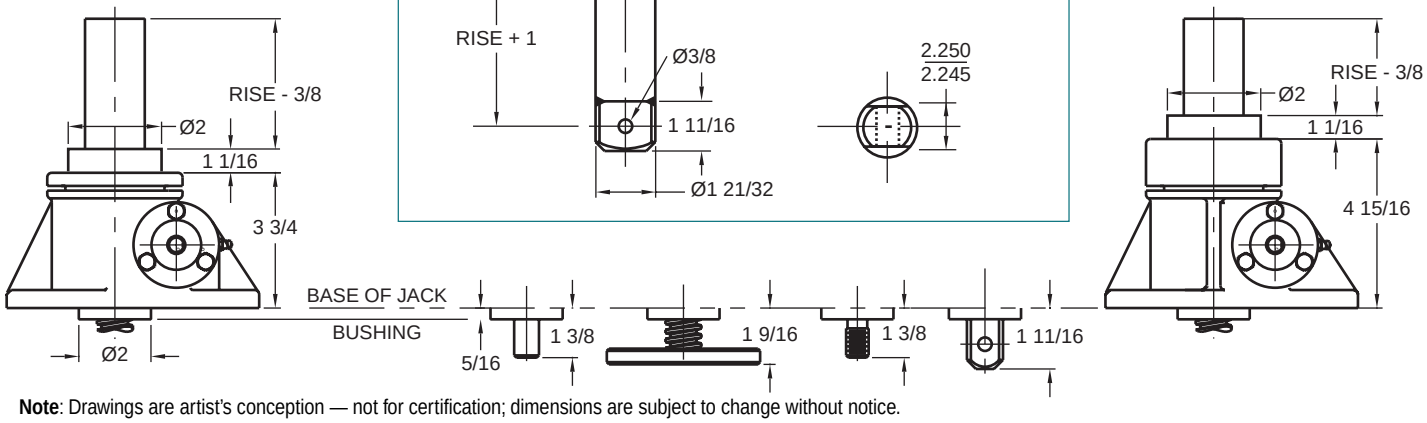

Note: Drawings are artist's conception — not for certification; dimensions are subject to change without notice.