JOYCE MACHINE SCREW JACKS

1 TON

WJ 51 / WJ 201

Upright

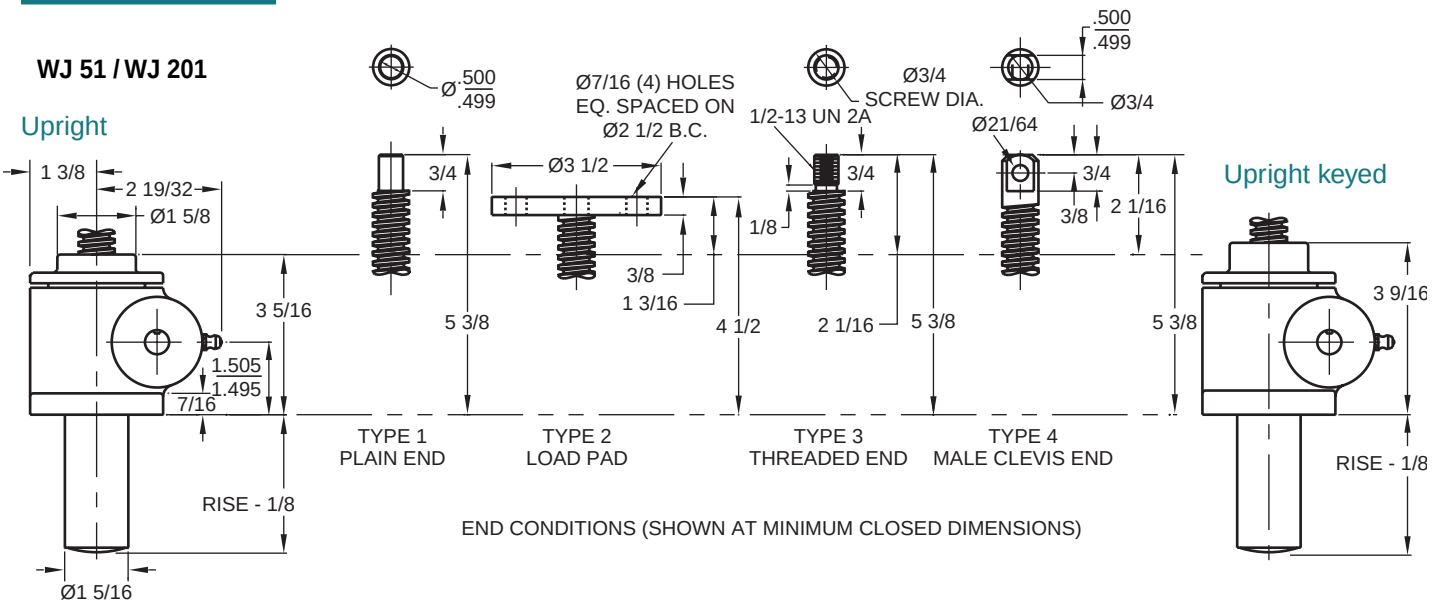

Upright traveling nut

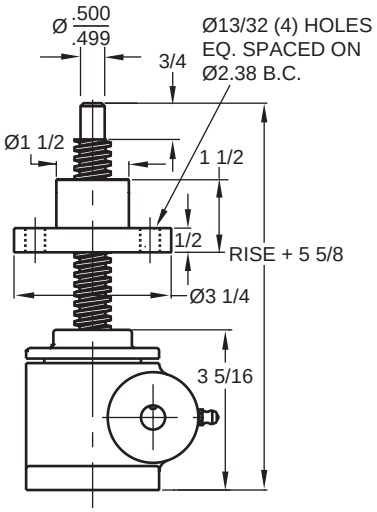

Typical Plan View

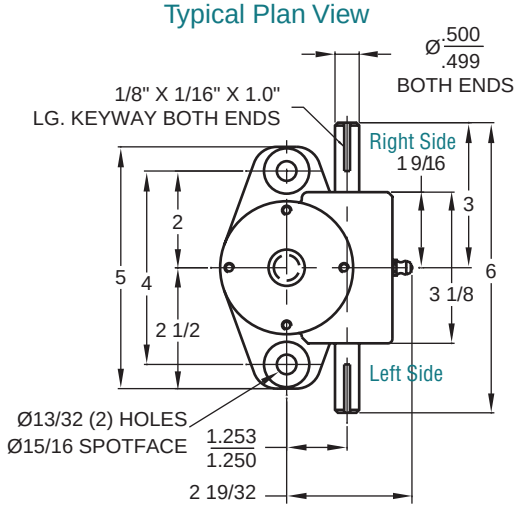

Inverted traveling nut

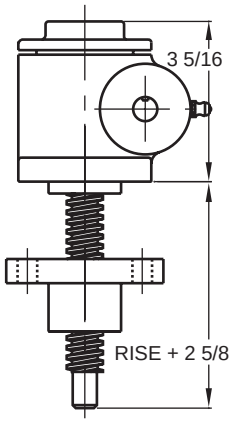

Inverted

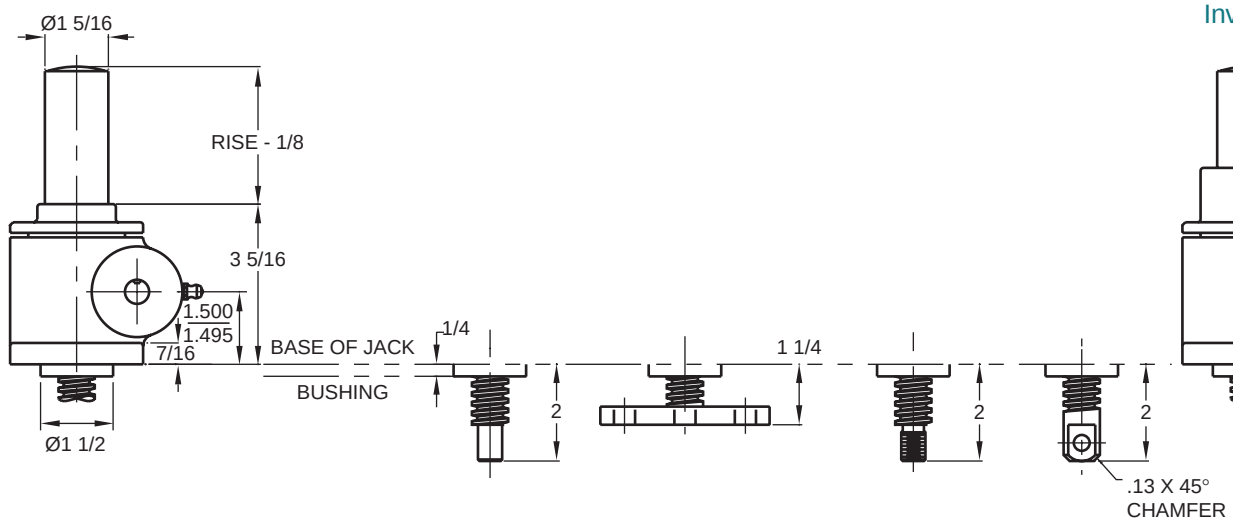

Inverted keyed

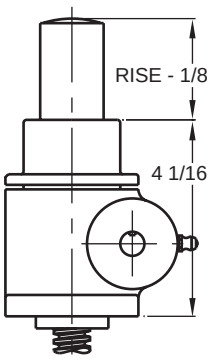

Note: Drawings are artist's conception — not for certification; dimensions are subject to change without notice.